BioThings Explorer: a tool for retrieving custom biomedical knowledge graphs using a federated network of biomedical APIs

Colleen H. Xu[*,1], Jackson Callaghan[*,1], Jiwen Xin[*,1], Marco Alvarado Cano[1], Anders Riutta[2], Eric Zhou[1], Rohan Juneja[1], Yao Yao[1], Everaldo Rodolpho[1], Madhumita Narayan[1], Kristina Hanspers[2], Ayushi Agrawal[2], Alexander R. Pico[2], Chunlei Wu[**,1], Andrew I Su[**,1]
[1] Department of Integrative Structural and Computational Biology, The Scripps Research Institute
[2] Data Science and Biotechnology, Gladstone Institutes, University of California, San Francisco
[*] - equal contribution [**] - corresponding authors

Problem:

It can take substantial time and effort to create and maintain biomedical knowledge graphs (KGs) built from multiple resources.

Solution:

Our software application BioThings Explorer (BTE) makes biomedical KG creation and use more accessible. BTE is a lightweight application that can run on most personal computers.

How BTE works:

When queried, BTE creates a KG of corresponding information from data retrieved on-the-fly from independently-hosted biomedical resources. BTE uses semantically-precise annotations of the resource APIs that describe the knowledge accessible, how to query for it, and how to process it into standardized nodes (biomedical concepts and entities) and edges (relationships between them). This federated design is easy to modify and enables access to up-to-date data.

Biomedical Knowledge Graphs (KGs)

Biomedical knowledge can be represented as graphs, with nodes representing concepts / entities and edges representing the relationships between them. These KGs can be used to find unexpected connections and infer new relationships that may warrant further study. For example, in the KG on the right, the relationship pattern of chronic myelogenous leukemia and known treatment imatinib is similar to that of asthma and imatinib. Imatinib has been studied as a potential treatment for asthma.

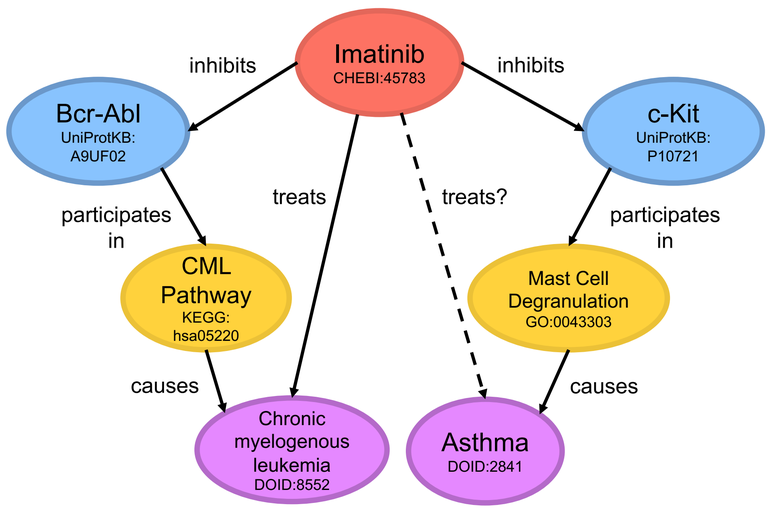

Distributed Knowledge: Data Federation

Creating these KGs from multiple biomedical resources can involve laborious centralization, standardization, and integration work. Instead, we took a federated approach, where knowledge stays in the original resources and our tool BTE retrieves, standardizes, and integrates this knowledge on-demand. For each resource, we wrote annotations that tell BTE how to manage API interactions and knowledge translation.

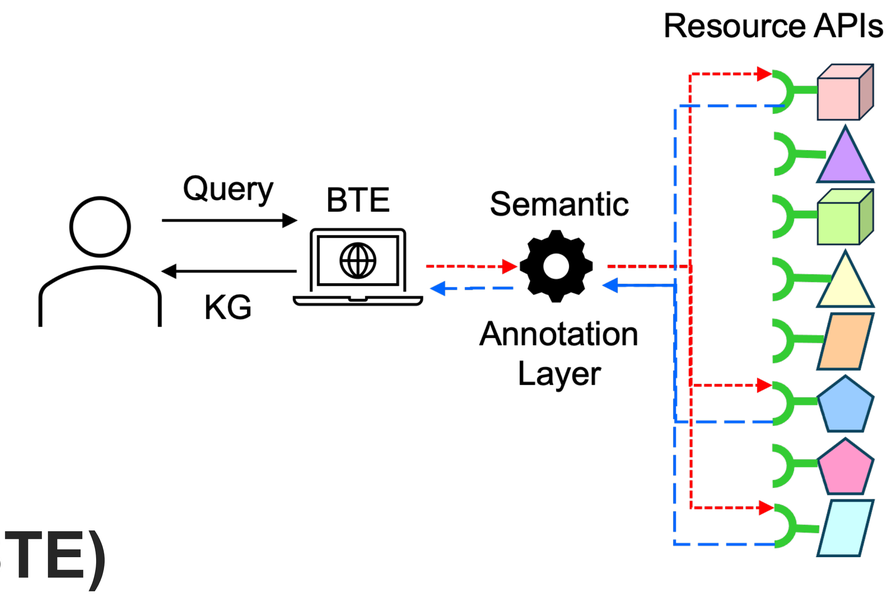

Annotating Resources for BioThings Explorer (BTE)

BTE can access > 30 biomedical resource APIs using our annotations. We use the OpenAPI standard for basic query and response information plus our custom semantic annotation of the biomedical relationships provided and categories / ID namespaces of the biomedical entities involved. This standardization of meaning between different resources allows us to integrate their knowledge into unified KGs.

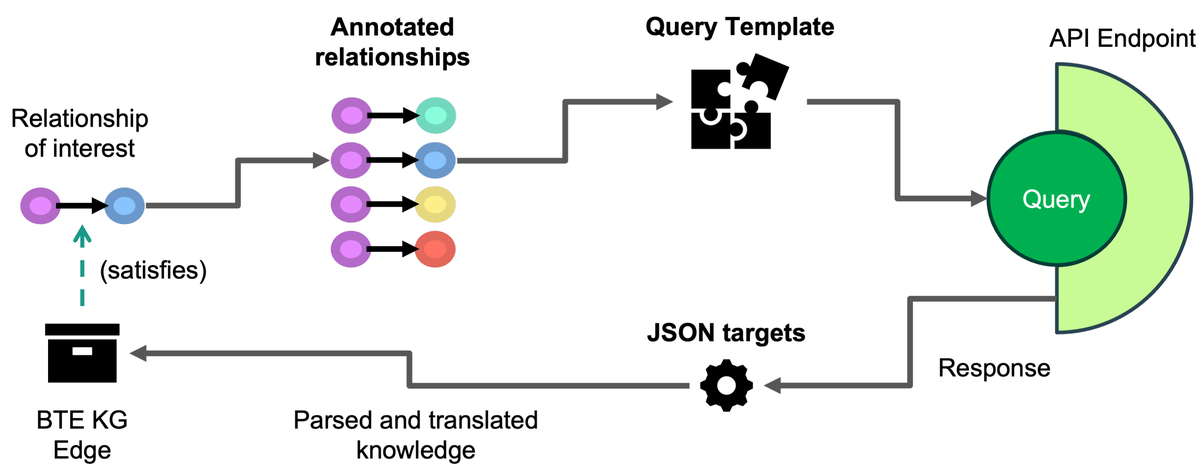

Custom Querying

A query to BTE is a graph representing a custom question. BTE traverses this graph, using its annotations to find resources with matching relationship types. It then queries those resources' APIs, processes responses to standardized nodes and edges, and assembles a KG.

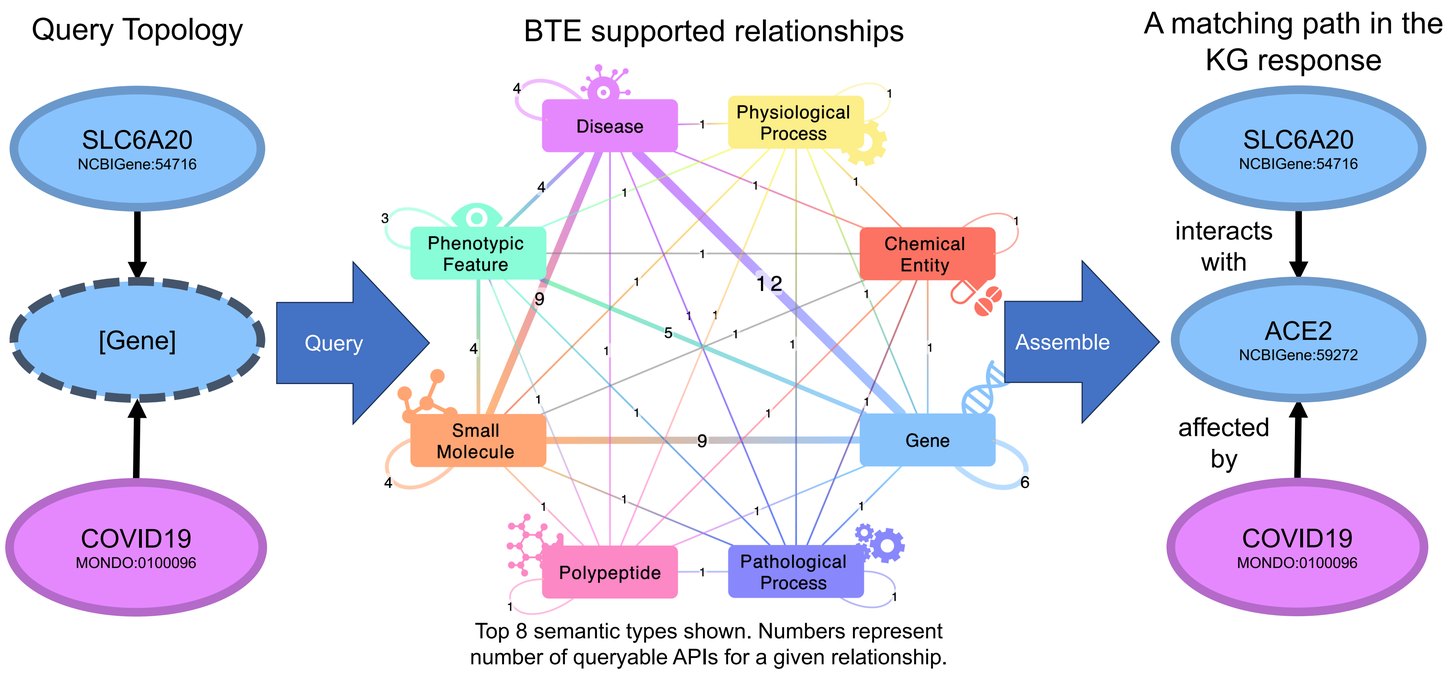

Top 8 semantic types shown. Numbers represent number of queryable APIs for a given relationship.

Website **Paper** **GitHub Repo**

Scripps Research
Integrative Structural and Computational Biology

Funding

TRANSLATOR — Funded by NIH's National Center for Advancing Translational Sciences
NATIONAL CENTER FOR DATA TO HEALTH
Scripps Research Translational Institute
NIH National Center for Advancing Translational Sciences